IOM manual

tapflo®

PTL

Peristaltic pumps

edition 2015 rev 1

STOP Read this instruction manual carefully, before you install and operate the pump

CE

PTL

PTL09
PTL13
PTL17
PTL25
PTL30
PTL45

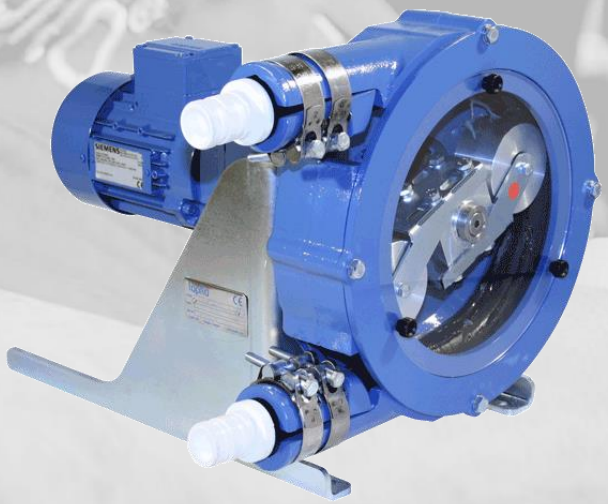

All about your flow

www.tapflo.com

SAFETY AND CONTROL MEASURES TO RESPECT IMPERATIVELY

1 - Mechanical risk

Ensure that all protections (cover, sight glass, ventilator hood, coupling protection) are in place before operating the pump.Disconnect the electricity supply before any mechanical intervention, except during a hose replacement. Hose replacement must be done with the pump cover closed. While replacing a hose, wear protective gloves and clothes and keep hands away from the brackets, suction and discharge flanges.
During the pump maintenance, check that the lifting points are correctly used. The frame of the pump must be firmly fastened to the ground.

2 - Electrical risk

Ensure that the electrical installation is conforming to the standards required in the country of use especially regarding earth and thermal protection.

3 - Operational risk

Check the compatibility of the products to be pumped with :

> The peristaltic pump principle.
> The hose material.
> The inserts material.
> The rollar material.

Tapflo cannot guaranty the hose lifetime or the product loss due to a hose burst. It is the operator's responsibility to prevent pumped liquid loss with additional hose rupture detectors and or automatic shut down valves. Check §2.4 conditions of guarantee for further information.

Ensure that the pump is compatible with the required process.
Ensure that the pressure applied on the suction side is compatible with the pump.

The rupture of the hose and its consequences must be taken in account :

> The pump casing can be filled with the pumped product.
> If the suction line is on load, this one can empty into the pump casing and leak out of the pump.
> If the discharge line is under pressure, the pumped product may be forced back into the pump casing and leak out of the pump.

A leakage detector as well as automatic shut down valves are recommended in order to prevent such consequences. While draining the pump following a hose rupture, take note of the risk of pollution caused by the pumped product.

The pump, being volumetric, may suffer dangerously high pressure by even partial blockage of the discharge line. Ensure that all protections have been made regarding this aspect.
Before each use, check the direction of rotation of the pump.

CONTENTS

1/ HOW TO USE THIS MAINTENANCE MANUAL 4

2/ SECURITY AND GUARANTEES 4
- 2.1 - Use of the pump 4
- 2.2 - Responsibility 4
- 2.3 - Training and instructions 4
- 2.4 - Conditions of guarantee 4

3/ DESCRIPTION 5
- 3.1 - Product identification 5
- 3.2 - Operation principle 5
- 3.3 - Pump construction 7
- 3.4 - Pump hose 7
- 3.5 - Pump gearbox 7
- 3.6 - Electrical Motor 7
- 3.7 - Available Options 7

4/ INSTALLATION 8
- 4.1 - Unpacking and control 8
- 4.2 - Conditions of installation 9
- 4.3 - Setup 9
- 4.4 - Pipings 9
- 4.5 - Pump liftin 9

5/ PUMP START UP 9
- 5.1 - Preparations 9
- 5.2 - Pump startup 9

6/ MAINTENANCE 10
- 6.1 - Hose cleaning 10
- 6.2 - Hose replacement 10
  - 6.2.1 - Hose removal PTL09 to PTL25
  - 6.2.2 - Hose replacement PTL09 to PTL25
  - 6.2.3 - Hose removal PTL30 to PTL45
  - 6.2.4 - Hose replacement PTL30 to PTL45
- 6.3 - Rollar ajustment 13
  - 6.3.1 - Hose removal PTL09 to PTL25
  - 6.3.2 - Hose replacement PTL09 to PTL25
- 6.4 - Maintenance and periodical controls PTL series 15

7/ STORAGE 15
- 7.1 - Pump storage 15
- 7.2 - Hose storage 15

8/ TROUBLESHOOTING 16

9/ CHARACTERISTICS AND TECHNICAL SPECIFICATIONS 17
- 9.1 - Performances curves 17
- 9.2 - Overall dimensions 18
- 9.3 - Nomenclature 20
- 9.4 - PTL Spare parts list 22
- 9.5 - Generated noise and temperature 23

10/ COMPLEMENTARY INSTRUCTIONS FOR ATEX CERTIFIED MATERIAL 24

11 / SECURITY FORM 31

12 / STATEMENT OF CE COMPLIANCE 32

1/ HOW TO USE THIS MAINTENANCE MANUAL

This manual is specific to Tapflo PTL series hose pumps. It allows the users to install, to start and to carry out maintenance on these pumps. All persons, fitters and users must read this maintenance manual in its entirety. Documents concerning the gearbox, the electrical motors as well as all other options (hose rupture detector etc) are provided in annex. Refer to in these documents to know the specific details of every apparatus.

Your local Tapflo distributor is at your disposal for the information that you would not find in this manual. For short reply, please indicate the following informations :

- Type of pump
- Pump serial number
- Reference of order

You can also visit our website tapflo.com for further information.

2/ USE OF THE PUMP

2.1 - USE OF THE PUMP

The pump was defined for a specific application. Any other use which does not comply with envisaged use is not guaranteed.

Tapflo cannot be held responsible for damage or possible wounds produced during the use of the pump. The pump was designed in accordance with EU norms and applicable directives. Use the pump only for applications represented above. If you want to change your application, first contact your Tapflo distributor.

2.2 - RESPONSABILITY

Tapflo will be under no circumstances responsible for damage or wounds caused by non respect of security directives and maintenance instructions contained in this manual, or by negligence during the installation, use, service or repair of Tapflo hose pumps. Moreover, additional directives of security can be necessary according to working conditions or according process. Contact your Tapflo distributor if you notice a potential danger during the use of the pump.

2.3 - TRAINING OF THE USER AND INSTRUCTIONS

Every person who installs, uses or performs any operations of maintenance on the pump must be qualified and must have previously read this technical manual. Any temporary personnel must be supervised by skilled users.
The order of execution of operations defined in this manual must be absolutely respected. Store this manual next to the pump so that it can be consulted at any time.

2.4 - CONDITIONS OF GUARANTEE

Tapflo offers a guarantee of 2 years on the pump's parts. Tapflo promises to repair or to replace for free all damaged parts except if their deterioration came from a poor use of the pump. This concerns all parts except for the hose, the clamps, the sleeves, seals, bushings and bearings as well as the pump shoes.

Tapflo will not be able to accept a request of guarantee under no circumstances if the used parts are not of Tapflo origin.

Any damaged parts covered by guarantee must be returned to the Tapflo pump factory or to the local Tapflo distributor. The returned parts must be accompanied with the duly filled and signed security form. A copy of this form is at the end of this manual. It must be appended in a visible way outside the packing. The potentially dangerous parts for health must be cleaned before returning them to the producer. It must be pointed out on the security form how parts were cleaned and those that have been decontaminated.

Tapflo is under no circumstances urged to respect guarantees given in its name by a third, whatever it is, representatives of Tapflo, subsidiaries and representatives including unless a specific agreement is written by a manager of Tapflo.

3/ PUMP DESCRIPTION

3.1 - IDENTIFICATION OF THE PUMP

Tapflo pumps are identifiable by the pump plate located on the frame. This one includes the type and serial number of the pump. This serial number leads to all information concerning building materials, nature of the hose, characteristics of the gearbox and characteristics of the motor. The gearbox as well as the motor include their own descriptive plate on which you can read the reduction ratio, power and electrical voltage etc.

3.2 - OPERATION PRINCIPLE

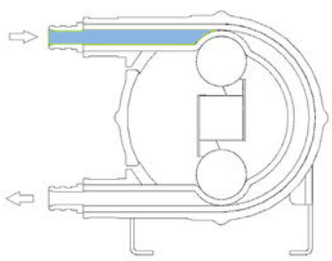

PHASE 1

The pump hose is compressed successively by two rollars assembled on a rotating wheel. The first rollar, by pressing the walls of the hose, will create a vacuum and attract the pumped liquid into the hose.

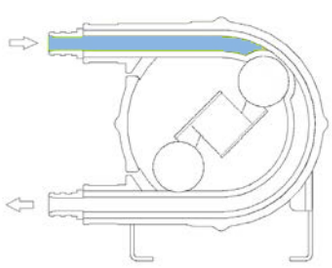

PHASE 2

The pumped liquid has now entered the hose. The second rollar will compress the hose and push the liquid towards the pump outlet.

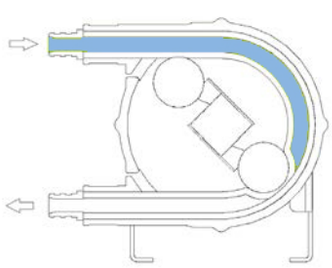

PHASE 3

As soon as, at the discharge side, the rollar is detached from the hose, the other rollar diametrically opposite is already in compression thus avoiding an internal product leakage. The product is then successively sucked and pushed due to the wheel rotation.

3.3 - PUMP CONSTRUCTION

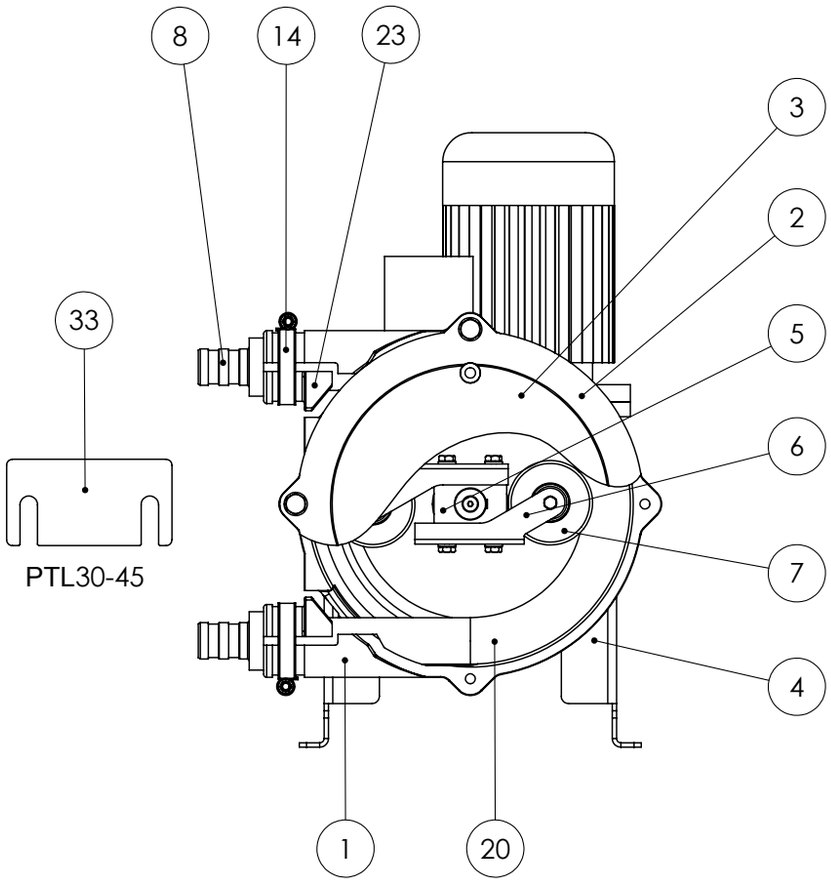

PART NO	DESIGNATION	MATERIAL PTL09 TO 25	MATERIAL PTL30 TO 45
1	CASING	ALUMINIUM	ALUMINIUM
2	COVER	ALUMINIUM	ALUMINIUM
3	SIGHTGLASS SEAL	LEXAN	LEXAN
4	FRAME	ELECTROPLATED STEEL	ELECTROPLATED STEEL
5	ROTOR	ALUMINIUM	ALUMINIUM
6	ROLLAR BRACKET	ELECTROPLATED STEEL	ALUMINIUM
7	ROLLAR	NYLATRON (PTL25 ALUMINIUM)	ALUMINIUM
8	INSERT	STAINLESS STEEL/PTFE	STAINLESS STEEL/PTFE
14	CLAMP	STAINLESS STEEL	STAINLESS STEEL
20	HOSE	see §3.4	see §3.4
23	HOSE LOCKING	ALUMINIUM	ALUMINIUM
33	SHIM		GALVANIZED STEEL

3.4 - HOSE

The Tapflo hoses are manufactured according to very strict specifications to acquire the best performances of the pump and to assure an optimum hose life. They are available in different materials : Natural Rubber (NR), perbunan (NBR), EPDM, Neoprene, Norprene, Pharmed, Silicone and Hypalon. The material of the hose must be compatible with the pumped liquid.

DIMENSIONS OF THE HOSE (mm)

PUMP	INSIDE Ø	THICKNESS	LENGTH
PTL09	9	3.5	345
PTL13	13	4.5	390
PTL17	17	7	590
PTL25	25	9	860
PTL30	30	12.5	1150
PTL45	45	15	1455

3.5 - GEARBOX

Our standard gearboxes are worm drives for pumps PTL09 to PTL17 and coaxial gearboxes for pumps PTL25 to PTL45. They have been sized according to the important radial loads of the pump. Consult the gearbox maintenance manual provided with the pump to know the quantity of lubricant requested as well as the periodicity of oil change.

3.6 - ELECTRICAL MOTORS

The standard motors provided on our pumps are squirrel-cage motors and have a 220/400 & 400/660V 50Hz three-phase voltage. If the pump has to work in a potentially explosive environment, please refer to the complementary information on ATEX compliances and contact your Tapflo distributor.

3.7 - AVAILABLE OPTIONS

Tapflo offers several options for their pumps :

> Hose rupture detector.
> Revolution-counter.

Please contact your Tapflo distributor for any information about these different options.

4/ INSTALLATION

4.1 - UNPACKING AND CONTROL

During the reception of the pump, please follow the indications pointed out on the packing. Undertake a visual control to be sure that no damage happened during the transport. If this is the case, please contact your Tapflo distributor as soon as possible.

4.2 - CONDITIONS OF USE

PTL pumps can work in atmospheres where the temperature is situated between - 20°C and +45°C. Pumps are delivered painted with a 150µ polyurethane paint which allows them to resist to certain aggressive ambiences. They are designed for indoor and outdoor setups.

4.3 - SET UP

Before installing the pump, check the following points :

- The pump is delivered with a frame provided with four anchoring holes. It must be fixed on a solid base with a slope which does not exceed 5mm for 1m and must be firmly fastened to this one.
- Require enough space around the pump to carry out maintenance. If such was not possible, consider the moving of the pump to a space provided for this purpose.
- Make sure that the room is adequately ventilated to releive the heat generated by the pump. Leave a space behind the motor ventilatior hood so as not to obstruct air intake.

4.4 - PIPING

Suction line piping :

- The internal diameter of the piping must be superior to that of the pump hose (see §3.4.).
- It must be the shortest and most direct possible to avoid suction loss.
- Install a valve on the suction line especially if the pump is on load.
- Limit the presence of bends and make sure that they are as large as possible.
- Make sure that piping can support the service pressure of the pump.

Discharge line piping :

- The internal diameter of piping must be superior to that of the pump hose (see §3.4.).
- It must be the shortest and most direct possible to avoid discharge pressure loss.
- Limit the presence of bends and make sure that they are as large as possible.
- Provide a space for a pulsation dampener (see picture below).
- If there is a valve on the discharge line, install a pressure valve or a over pressure protection gauge to avoid any possible damage to the pump and to the installation.
- It is recommended to install a Dillatoflex® pipe to absorb vibrations created by the pump pulsations.

During the pump ground study, provide enough space for the hose change.
Distance (L) is the required length for hose removal.

POMPE	DISTANCE (L)
PTL09	400
PTL13	400
PTL17	600
PTL25	700
PTL30	1200
PTL45	1500

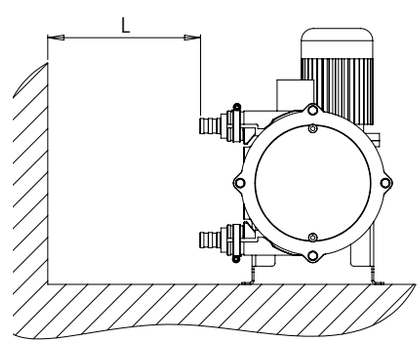

4.5 - LIFTING THE PUMP

Pumps are provided with two lift holes placed on the upper part of the frame.

While lifting the pump, respect the following points :

- Lift the complete hose pump using the lifting holes plus additional support on the gearbox and the motor using suitably rated straps or slings.
- Never exceed the upper limits of lift and control the motorized pump weights in the table below.
- The motorized pump, given its centre of gravity, will tend to overbalance on the pump head side. Make sure that the persons are at a security distance of the pump to avoid any risk of wound.
- Never raise the pump otherwise than by the pump's lifting rings.
- Never raise the pump by it's orifices.

ALL WEIGHTS IN KILOGRAMS						
PART	PTL09	PTL13	PTL17	PTL25	PTL30	PTL45
FIXED SPEED	8	9	15	36	80	127
VARIABLE SPEED	12	13	19	46	90	150

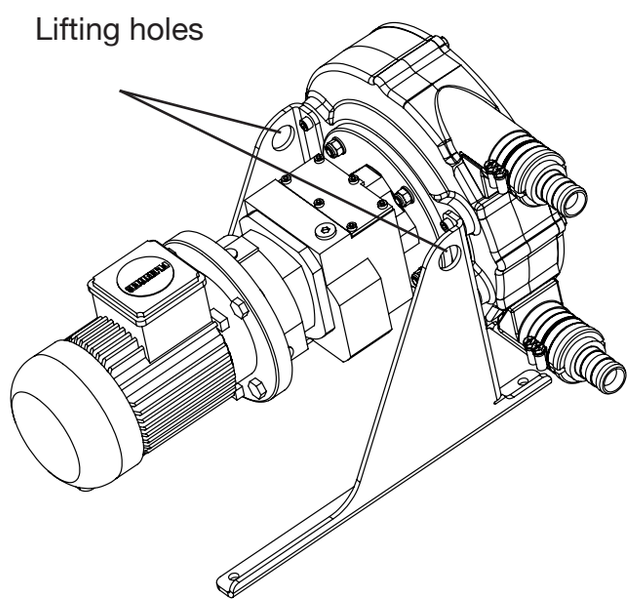

5/ PUMP START UP

5.1 - PREPARATIONS

a. Connect the electrical motor in accordance with the local rules and regulations. Perform this workby qualified personnel.
b. Undertake rollar ajustment of the pump according to the pump process (see §6.3 ROLLAR AJUSTMENT).The pumps are always delivered with non-ajusted rollars.
c. Check the direction of rotation of the pump. It is recommended to install a rotation inverter on the motor for the hose change.

5.2 - START UP

a. Install piping at the inlet and outlet of the pump.
b. Make sure that valves at the inlet and outlet are opened.
c. Start the pump by checking its direction of rotation by the sight glass.
d.Check the flow and discharge pressure and ajust rollars if these figures don't match the pump specifications.

6/ MAINTENANCE

6.1 - HOSE CLEANING

The hose cleaning can be done without removing the hose. It can be done with water or with a cleaning liquid (check compatibility with hose material). With numerous products, it is necessary to clean the hose after every pumping in order to avoid the hardening of the product inside this one.

CAUTION ! Make sure that the cleaning liquid temperature is adapted to the hose material.

6.2 - HOSE REPLACEMENT

CAUTION ! Before any hose change, check the following points :

a. This service has to be performed by skilled personnel that is acquainted with this manual.
b. Inlet and outlet valves have to be closed to minimize product loss.
c. Always carry clothes and necessary protection according to the pumped product.
d. Respect all security and enviromental rules necessary for the manipulation of the pumped product.

6.2.1 - HOSE REMOVAL FOR PTL09 TO PTL25

1 - Disconnect and remove the suction and discharge piping.

2 - Place the rotor in the position showed in the fig. so that only one rollar is pressing the hose.

3 - Disconnect power supply.

4 - Remove cover #2

5 - Loosen the screws of the rollar bracket (2 screws) and withdraw the bracket so that it doesn't press the hose any more. DO NOT loosen the free rollar bracket.

6 - Dismantle collars #14 on both sides.

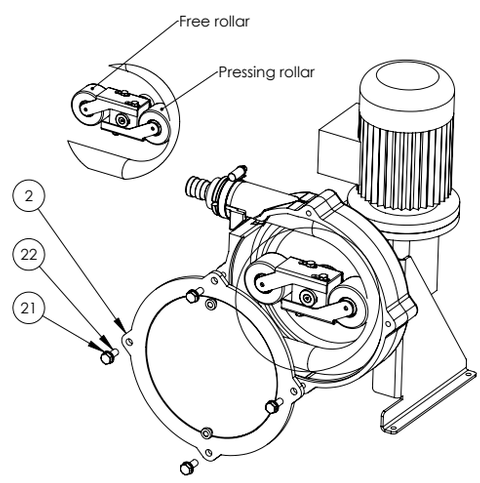

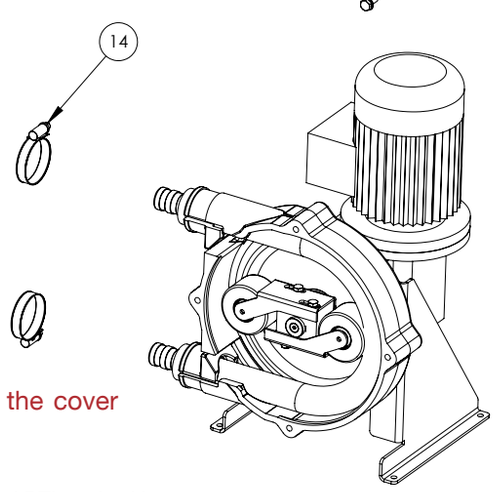

CAUTION ! Never run the pump without the cover and sight glass !

7 - Dismantle hose lockings #23 on both sides.

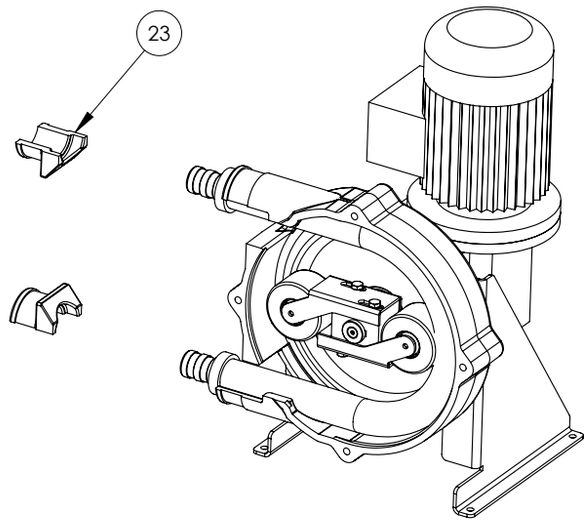

8. Pull the hose out of the front of the pump casing.

9. Pull the hose connectors from the worn hose.
If re-usable, carefully clean them.

10. Carefully clean the pump casing and front cover.

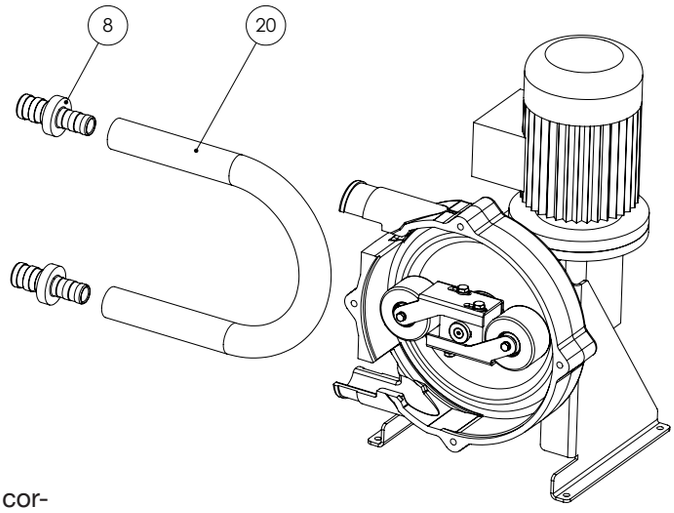

6.2.2 - HOSE REPLACEMENT FOR PTL09 TO PTL25

1. Check that the new hose is clean and has the correct size.

2. Install connectors #16 on the new hose #20.

3. Make sure the rollars are in the same position as before.

4. Make a U bend with the hose and place it inside the pump casing.

5. Position the upper connector against the pump casing inlet. Place the top hose locking #23 and position the collar #14 in it's groove. Tighten the collar screw.

6. Repeat step 5 on the lower connexion.

7. Smear non-petroleum silicone grease on the inner surface of the hose (where the rollars run).

8. Set the rollar pressure according to the procedure described in § 6.4 ROLLAR PRESSURE ADJUSTMENT.

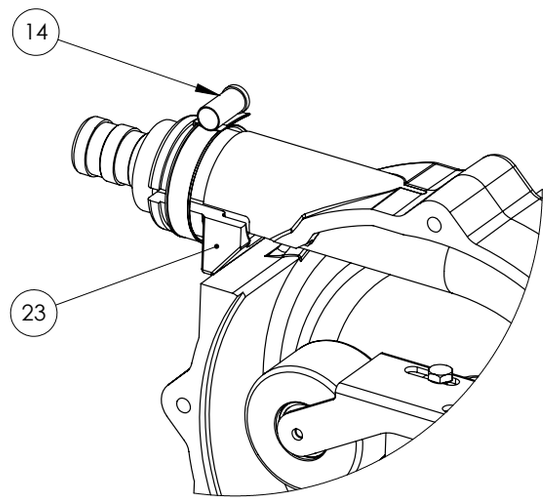

IMPORTANT : On models PTL09 to PTL25, the hose must lay completly against the inside of the pump casing.

6.2.3 - HOSE REMOVAL FOR PTL30 TO PTL45

1 - Disconnect and remove the suction and discharge piping.

2 - Place the rotor in the position showed in the fig. so that only one rollar is pressing the hose.

3 - Disconnect power supply.

4 - Remove cover #2 and screws #21+22.

5 - Loosen the two screws #24 and remove the free rollar #6. Put aside the shims #33.

6 - Replace the cover #2, connect power supply and turn the rotor 180° so that the rollar is no longer pressing the hose. DO NOT LOOSEN the remaining rollar bracket #6.

7 - Disconect power supply, remove cover #2 and undertake steps 4 to 10 as in §6.3.1 HOSE REMOVAL PTL09 to PTL25.

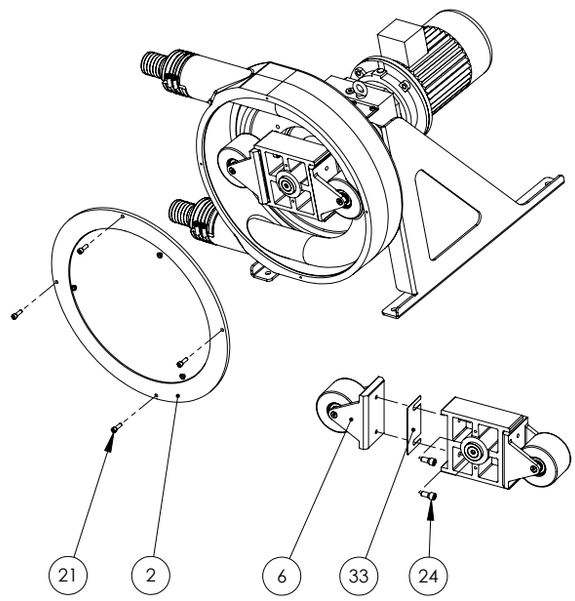

6.2.4 - REPLACEMENT OF THE HOSE FOR PUMPS PTL30 TO PTL45

1 - Check that the new hose is clean and has the correct size

2 - Install connectors #16 on the new hose #20.

3 - Make sure the rollars are in the same position as before.

4 - Make a U bend with the hose and place it inside the pump casing.

5 - Position the upper connector against the pump casing inlet. Place the top hose locking #23 and position the collars #14 in their groove. Tighten the collar screw.

6 - Repeat step 5 on the lower connexion.

7 - **IMPORTANT :** allow a 1 to 1.5 mm gap between the hose and the inside of the pump casing as shown in fig.

8 - Smear non-petroleum silicone grease on the inner surface of the hose (where the rollars run).

9 - Place cover #2 and connect power supply.

10 - Turn the rotor 180°.

11 - Remove cover and mount the second rollar without any shims.

12 - Set the rollar pressure according to the procedure described in § 6.3 ROLLAR ADJUSTMENT.

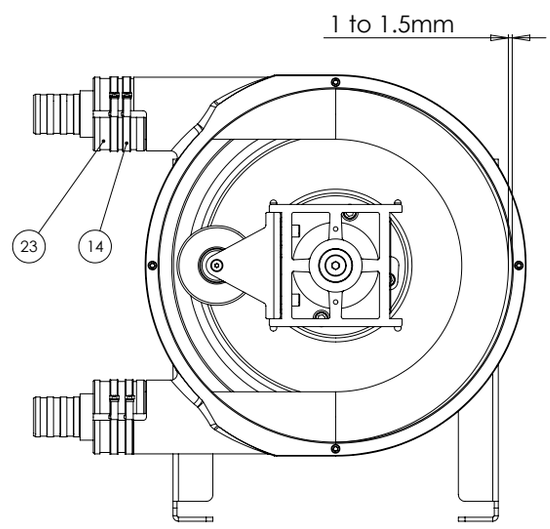

6.3 - ROLLAR ADJUSTMENT

CAUTION ! The rollar ajustment is an operation which consists in ajusting the rollar brackets to prevent any internal leakage. An internal leakage considerably reduces the lifetime of the hose as well as the flow. As a result, it is essential to adjust the rollars according to the rotation speed of the pump, the desired discharge pressure and the liquid viscosity.

WARNING ! Never run the pump without the sight glass.

6.3.1 - ROLLAR ADJUSTMENT PTL09 TO PTL25

Note : The pressure setting must be checked when a new hose is installed because of variations in the hose thickness.

1 - Remove the sight glass from the pump casing.

2 - Slightly loosen the screws of the bracket that is compressing the hose.

3 - Ajust the fixed rollar bracket so that the back meets the rotor side as shown in the figure. Tighten the bracket screws.

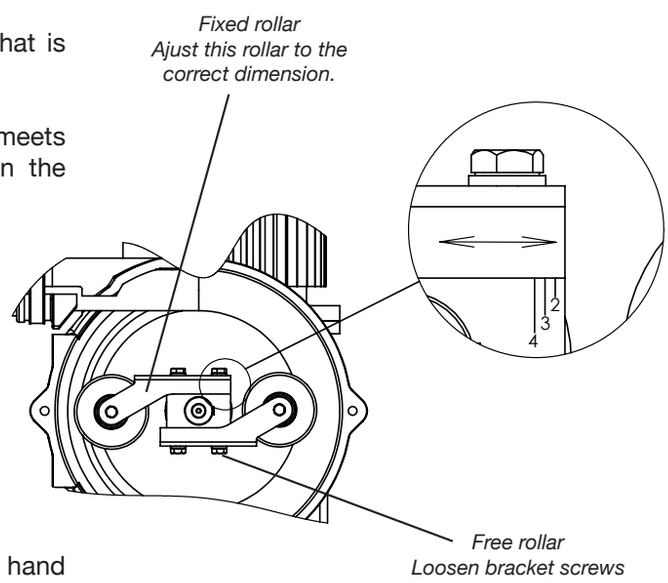

4 - Place the sight glass on the pump cover

5 - Run the pump and place the palm of your hand over the inlet port (suction side) and check if the fixed rollar is ajusted enough to create a suction. If not, remove the cover again and move the fixed rollar untill it meets the graduation mark 2.

4 - Repeat steps 4 and 5 moving the bracket sideways to marks 2,3 or 4 untill you obtain the correct suction (-0.6bar).

5 - Ajust the free rollar to the same distance, replace the cover and test-run the pump.
Re-ajust if necessary.

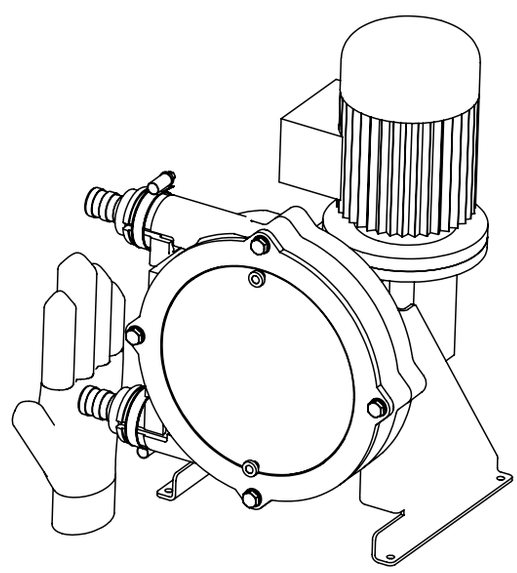

WARNING ! The two rollars must be equally ajusted.

6.4.2 - ROLLAR ADJUSTMENT PTL30 TO PTL45

Note : The pressure setting must be checked when a new hose is installed because of variations in the hose thicknes

1 - Disconnect power supply.

2 - Remove sight glass from the pump cover.

3 - Loosen the screws #24 and remove all shims #33 under the rollar brackets #6.

4 - Re-tighten the screws #24 and replace the sight glass. Connect power supply.

5 - Run the pump. Place the palm of your hand over the inlet (suction side) and check whether the pump is compressing the hose enough to create a vacuum. If the vacuum isn't sufficient, add successively a 0.5mm shim under one rollar bracket and repeat the test untill you obtain a correct suction value (-0.6bar).

6 - Add the same number of shims under the other rollar.

7 - Replace the sight glass.

8 - Test-run the pump in full operation and re-ajust if necessary.

WARNING ! ***The two rollars must be equally adjusted***

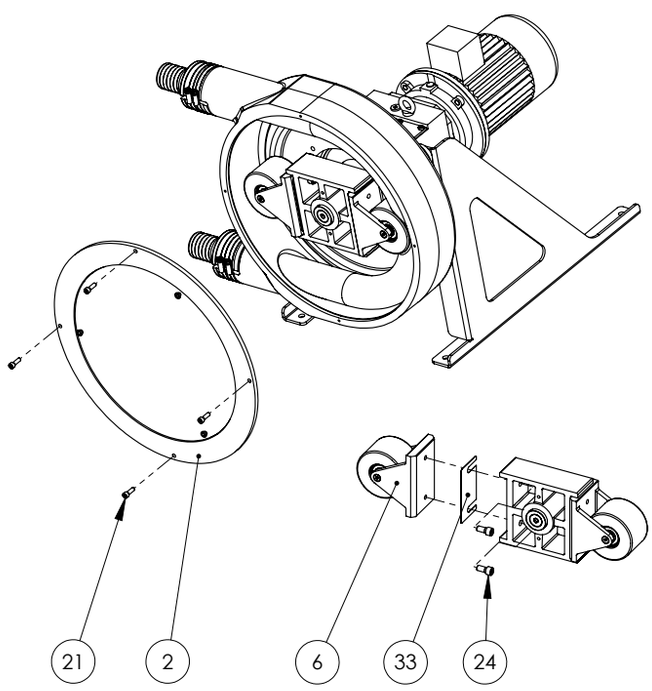

6.4 - MAINTENANCE AND PERIODIC INSPECTIONS PTL SERIES

1	Pump hose replacement.	In prevention, change the pump hose after 90 % of the life time of the first hose.	see §6.2
2	Gearbox oil replacement.	Refer to the gearbox maintenance manual provided with the pump.	
3	Replacement of the rollars.	If these are worn on the contact surface.	
4	Check for wear on the rollar pressing surface.	At every hose change.	
5	Check the presence of a gearbox oil leakage.	Before starting the pump and periodically during the pump service.	
6	Check for strange noises coming from the pump, gearbox and bearing case or abnormal pump casing temperature.	Periodically during the pump service.	
7	Check for leakages at inlet and outlet ports.	Periodically during the pump service.	Re-tighten collars.

7 / STORAGE

7.1 - STORAGE OF THE PUMP

Store the pump in a sheltered and dry place and ensure that the storage room temperature is between - 20°C and +45°C.

Protect the pump if necessary and block the inlet and outlet orifices :

If the pump stays without working more than 1 month, withdraw the hose from the pump or withdraw one of the rollars from the hose.

If you can neither withdraw the hose or one of the rollars, run the pump 5min a week.

7.2 - STORAGE OF THE HOSE PUMP

Hoses must be stored sheltered from light in a cool place. Their life is reduced after two years. The performance of hoses is reduced at the end of this expiry date due to the ageing of rubber.

8 / TROUBLESHOOTING

PROBLEM	POSSIBLE REASON	RESOLUTION
The pump does not work	No power supply.	Check that the pump power switch is on position “ON”.
		Check the connection of the motor.
	The wheel of the pump stalls.	Check the fixing of the hose.
		Check that the discharge pressure is not too high.
		Check that the product hasn´t sedimentated in the hose.
Low capacity or pressure	Bad rollar ajustment.	Reajust the rollars.
	Air leak at the inlet of the pump.	Check the tightening of the clamps of the pump and the sealing of the inlet piping.
	Valve closed or partly closed at inlet.	Fully open the valve.
	Wear of the hose.	Replace the hose.
	Product too viscous or too high pump speed in comparison with the product viscosity.	Ask for advice from your Tapflo distributor.
	Piping blocked or partly blocked at inlet.	Unblock piping at inlet and make sure of the good flow of the product.
Hose life time is too short.	Incompatibility of the hose with the pumped product.	Make sure the compatibility of the hose with your product and contact your Tapflo distributor.
	Discharge pressure too high.	Check that the discharge pressure of the pump does not exceed the max. pressure of the pump (see curves). Check that the outlet piping is not blocked up and that all valves are opened. Make sure that the security valve works correctly. Make sure that the piping friction losses do not exceed the value requested for an appropriate functioning of the pump.
	Pump speed too high.	Reduce the pump speed.
	Bad rollar ajustment.	Check the ajustment.
	Too high temperature of the product.	Contact your Tapflo distributor.
Pulsations in piping.	Deficient fastening of the piping.	Fix piping correctly.
	Process creating important pulsations due to the product, the speed of the pump, discharge pressure or the sizing of piping.	Contact your Tapflo distributor.
Abnormal noise coming from the bearing case (PTL09-13-17).	Worn bearings.	Replace bearings.

9 / CHARACTERISTICS AND TECHNICAL SPECIFICATIONS

9.1 - PERFORMANCE CURVES

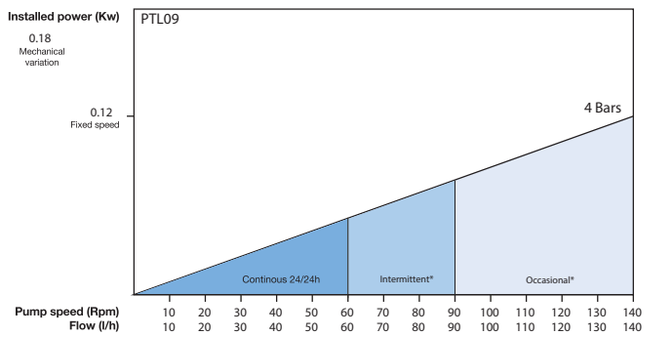

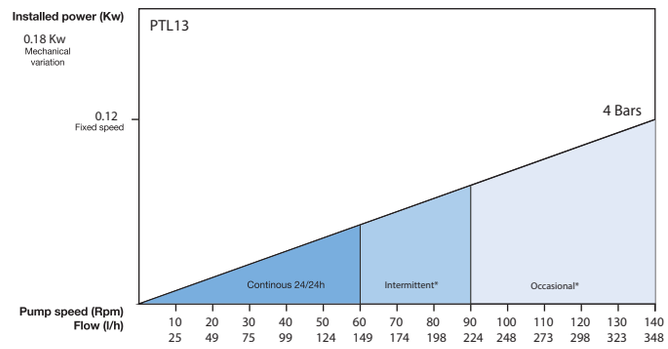

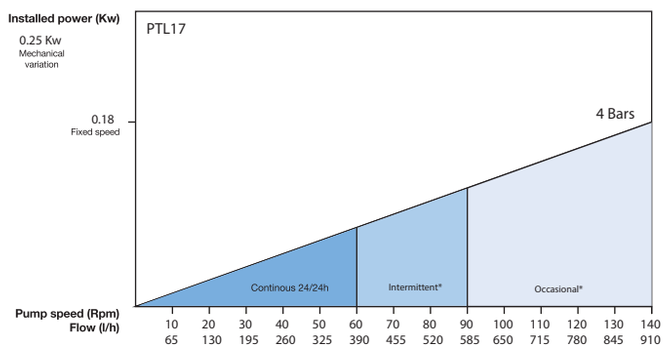

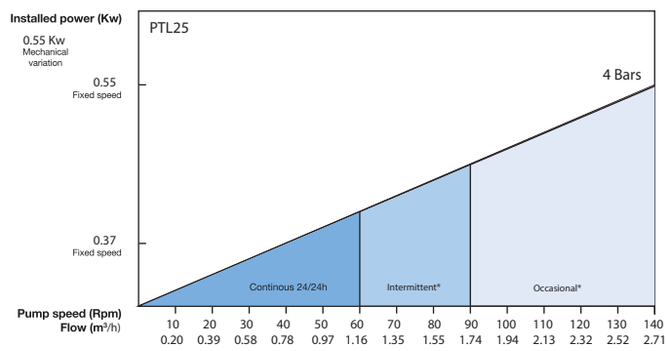

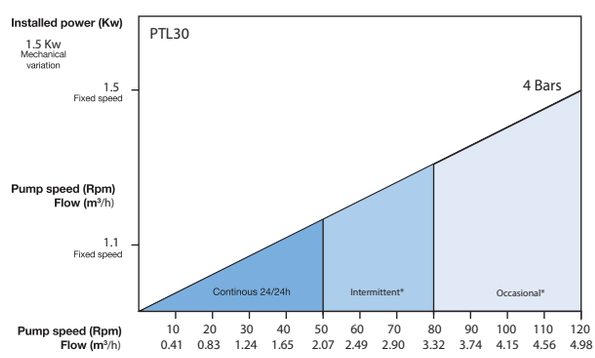

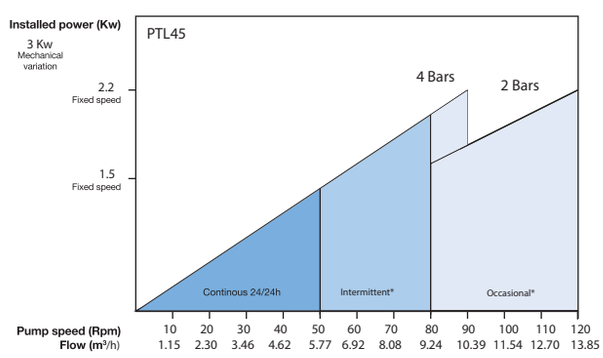

9.2 - TAPFLO PUMP DIMENSIONS PTL09 TO PTL45

PUMPS PTL09 TO PTL17

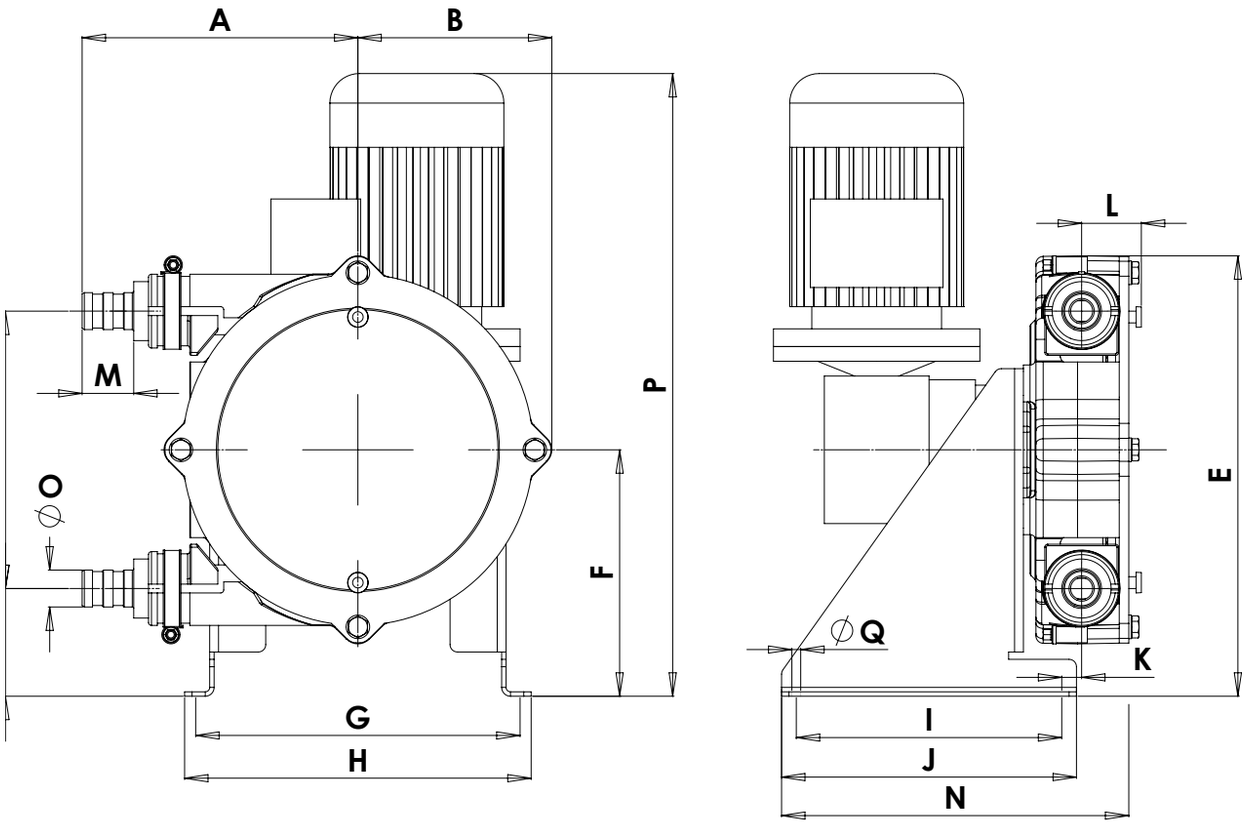

SIZE	A	B	C	D	E	F	G	H	I	J	K	L	M	N	O	P	ØQ
PTL 09F	114	75	104	58	185	110	145	160	156	170	3,5	25	20	187,5	15	335	6
PTL 09VM	114	75	104	58	185	110	145	160	156	170	3,5	25	20	187,5	15	485	6
PTL 13F	126	95	132	61	222	127	165	180	156	170	10	28	20	197	19	352	6
PTL 13VM	126	95	132	61	222	127	165	180	156	170	10	28	20	197	19	502	6
PTL 17F	187	131	188	73	290	167	220	235	180	200	13,5	40,5	35	235,5	25	427	6
PTL 17VM	187	131	188	73	290	167	220	235	180	200	13,5	40,5	35	235,5	25	527	6

All dimensions are suject to change without notice.

9.2 - TAPFLO PUMP DIMENSIONS PTL09 TO PTL45

PUMPS PTL25 TO PTL45

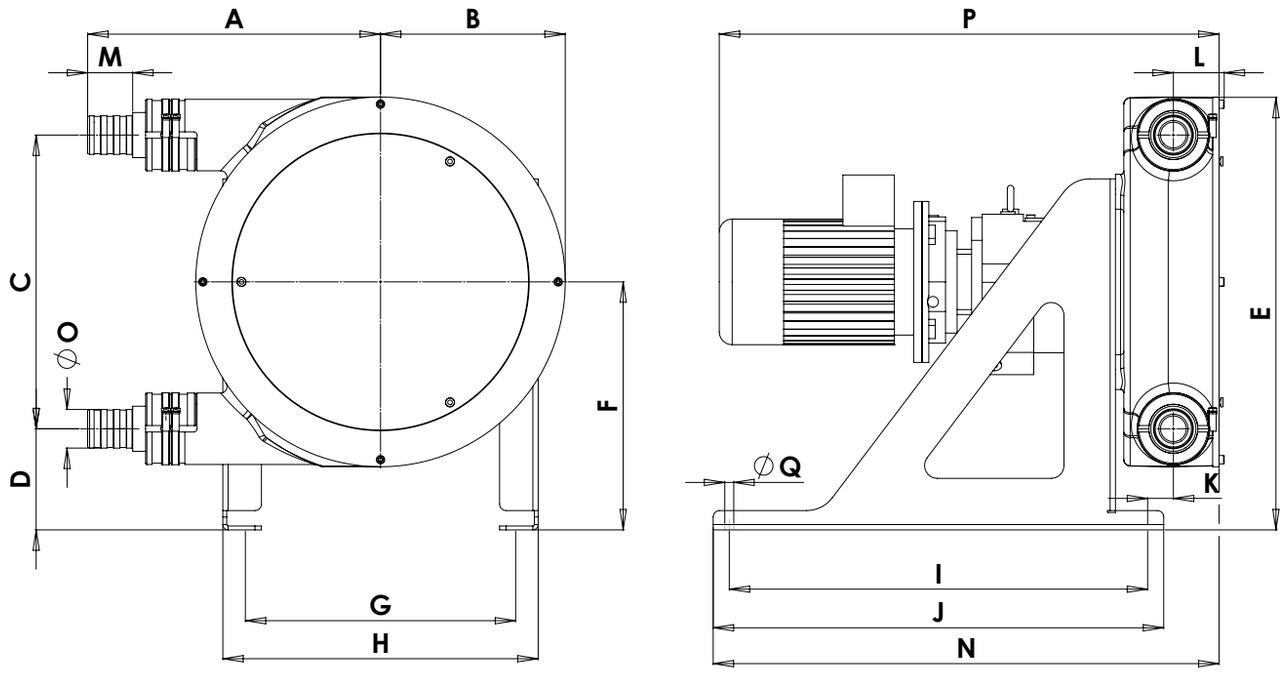

SIZE	A	B	C	D	E	F	G	H	I	J	K	L	M	N	O	P	ØQ
PTL 25F	275	170	256	90	388	218	240	270	400	440	18	52,5	45	482	35	580	11
PTL 25VM	275	170	256	90	388	218	240	270	400	440	18	52,5	45	482	35	720	11
PTL 30F	345	226	364	148	556	330	330	380	550	600	22	66,5	55	655,5	45	672,5	14
PTL 30VM	345	226	364	148	556	330	330	380	550	600	22	66,5	55	655,5	45	812,5	14
PTL 45F	455	287	456	157	672	385	420	470	650	700	40	79	70	786	60	776,5	14
PTL 45VM	455	287	456	157	672	385	420	470	650	700	40	79	70	786	60	916,5	14

All dimensions are suject to change without notice.

9.3 - NOMENCLATURE

EXPLODED VIEW PTL 09 - 13 - 17

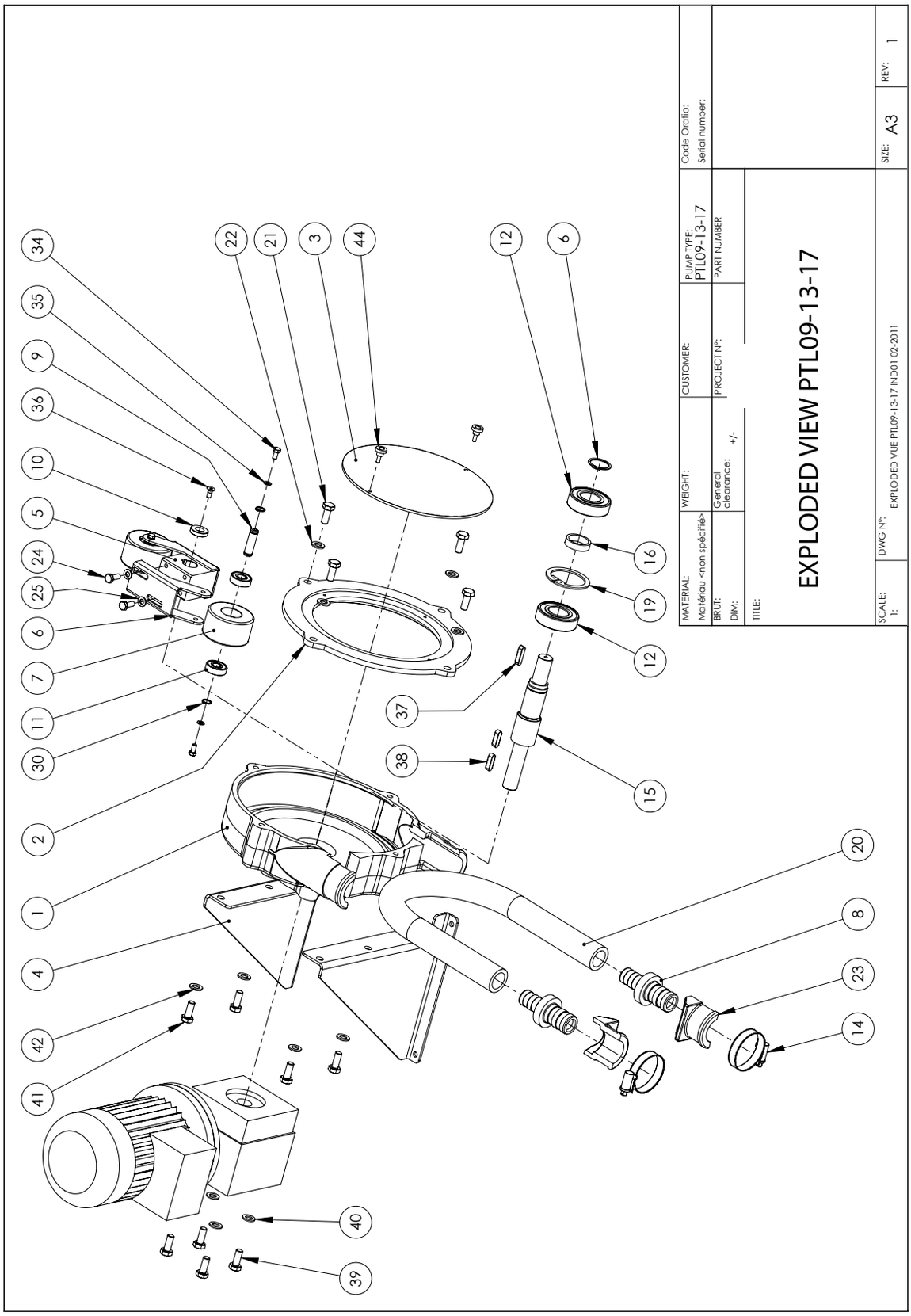

9.3 - NOMENCLATURE

EXPLODED VIEW PTL 25 - 30 - 45

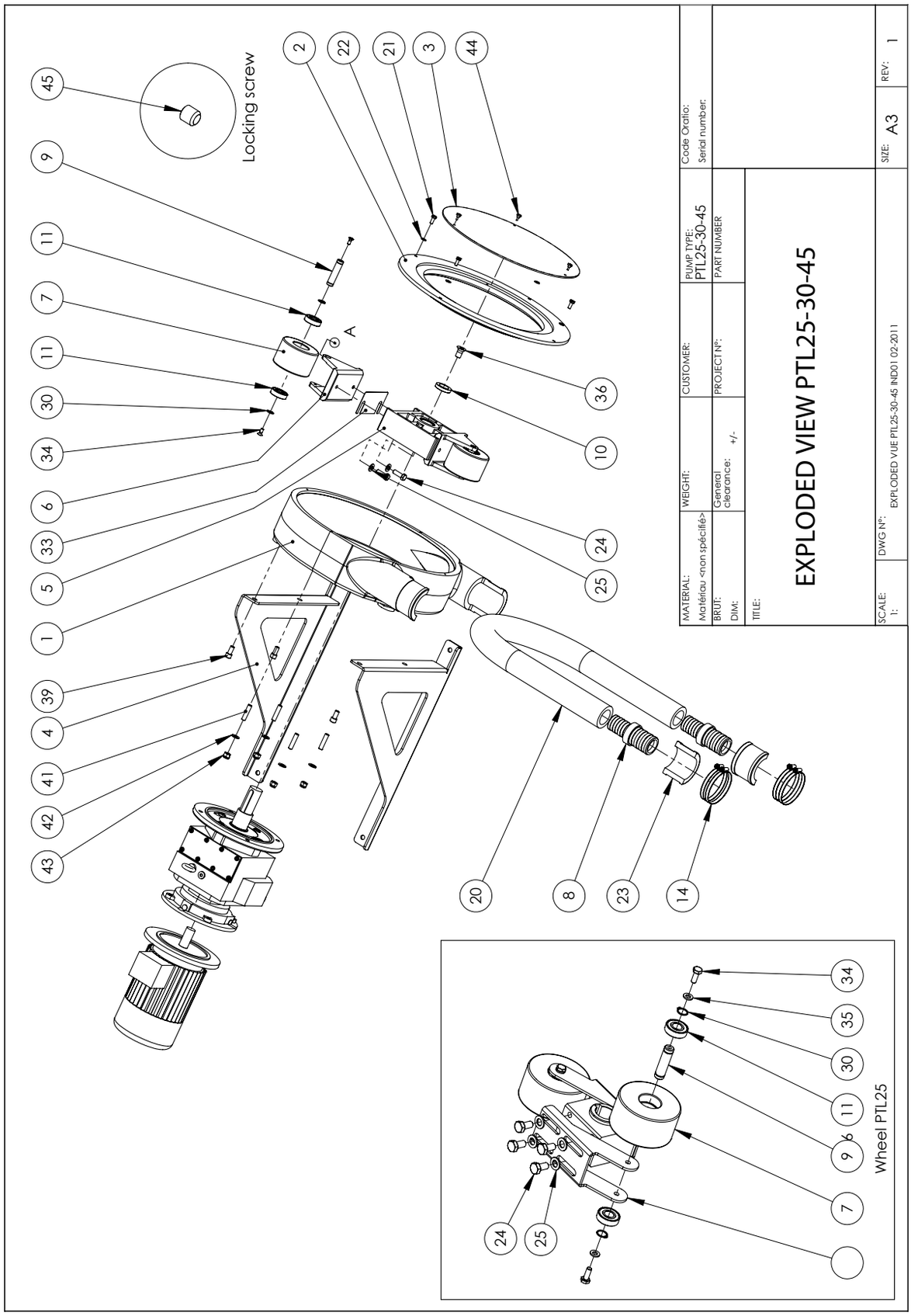

9.4 - PTL PUMP PARTS LIST (see speci.c exploded view)

REF.	DESIGNATION	PTL09-13-17	PTL25	PTL30-45
1	CASING	X	X	X
2	COVER	X	X	X
3	SIGHT GLASS	X	X	X
4	FRAME	X	X	X
5	ROTOR	X		
6	PRESSURE HOLDER	X	X	X
7	PRESSURE ROLLAR	X	X	X
8	CONNEXION HOSE	X	X	X
9	ROLLAR PIN	X	X	X
10	ROUND ROTOR ASSY	X	X	X
11	BALL BEARING - ROLLAR	X	X	X
12	BALL BEARING - CASING	X		
14	COLLAR	X	X	X
15	ROTOR SHAFT	X		
16	SPACER	X		
18	CIRCLIP - SHAFT	X		
19	CIRCLIP - CASING	X		
20	HOSE	X	X	X
21	SCREW- COVER	X	X	X
22	WASHER - COVER	X	X	X
23	HOSE LOCKING	X	X	X
24	SCREW - BRACKET	X	X	X
25	WASHER - BRACKET	X	X	X
30	CIRCLIPS - ROLLAR PIN	X	X	X
33	SHIM			X
34	WASHER -PIN	X	X	
35	SCREW - PIN	X	X	X
36	SCREW - SHAFT	X	X	X
37	KEY - ROTOR	X		
38	KEY - GEARBOX	X		
39	SCREW - FRAME	X	X	X
40	WASHER - FRAME	X		
41	GUDGEON OR SCREW	X	X	X
42	WASHER - GEARBOX	X	X	X
43	NUT - GEARBOX		X	X
44	SCREW - SIGHT GLASS	X	X	X
45	LOCK SCREW - PRESSURE HOLDER			X

9.5 - GENERATED NOISE AND TEMPERATURE

NOISE

The Tapflo peristaltic pumps do not generate more than 60dB during their operation.

TEMPERATURE

The cover and the pump casing can become very hot due to the friction on the hose and liquid temperature.
If you need to limit the pump temperature, please contact your Tapflo distributor.

10/ COMPLEMENTARY INSTRUCTIONS FOR ATEX CERTIFIED MATERIAL

PERISTALTIC HOSE PUMP

Complementary instructions for ATEX certified material

Models Tapflo PTL

Pumping and operation in zone 0 is completely banned.

The pumps are planned for a use in the following gas and dust explosive atmospheres.

II 2G : zone 1 and 2
II 3G : zone 1 and 2
II 2D : zone 1 and 2
II 3D : zone 1 and 2

The following instructions must be read jointly with :

> All ATEX regulations for the country for which the pump is destined.
> Decrees, laws, directives, application circulars, the standards, the code of practice, and any other document concerning its place of installation.

No responsibility whatsoever is taken for the non-observance of these instructions.

The ATEX formular provided by the customer which stipulates all the data concerning his process and application of the pump is the only evidence in case of dispute. The non-observance of this data will disengage the responsibility of Tapflo.

This information is complimentary to our general maintenance manual.

The installation of the material must be carried out by qualified and skilled personnel.

Our equipment is marked EEC with the ATEX 94/9/CE title.

Ensure compatibility between the indications being reproduced on the gauge, the present explosive atmosphere, the zone of use, ambient and surface temperatures.

Until the 30.06.2003, the equipment on the market could be equipped with accessories or (and) components certified according to the rules of CENELEC relating to the electric materials usable in explosive atmospheres of group II. From this date, the accessories or (and) component assembled equipping the motors with our pumps must have an EEC examination certificate.

Summary

1 - Level of pumps certification

2 - Protection of the pumping part

3 - Protection of the transmission part

4 - Particular dispositions when using a frequency inverter

5 - Dry running the pumps

6 - Replacement of parts

7 - Solvents incompatible with pumps seals

8 - Possible leakage of pumped liquid

9 - Drive of the pump

9.1 - Electric installation of the motor or the motor reducer of the pump

9.2 - Ground connection of the pump

9.3 - ATEX characteristics of the motor or the motor reducer of the pump

10 - ATEX characteristics of the pumping installation

11 - Security form

12 - Pumping vat of retention

13 - Marking of the pump

1 - Complementary instructions for ATEX certified material

All Tapflo peristaltic pumps are certified with II 2G T4, II 3G T4 or II 2D T4 certification.

The pumps are machines whose surface temperatures are very dependent on the temperature of the product that they pump. Moreover, the peristaltic pumps have “mechanical” heating due to the deformations of the hose, depending on the discharge pressure and speed of rotation of the pump. So, the level of protection II 2G T4, II 3G T4, II 3D T4 and II 3D T4 is obtained with the working limits determined at the reception of the ATEX form (see adjoined form)..

Pumps PTL09, PTL13, PTL17, PTL25, PTL30 and PTL45 are limited to a maximum discharge pressure of 2 bars.

Going beyond of the working limitations specified at the sale is regarded as an abnormal function of the pump. This can generate surface temperatures higher than the safe maximum surface temperatures recommended in the classification of temperature T for which the pump was certified. It is the responsibility of the operator to respect these working limits.

In order to use the pump industrially with the required safety levels, safety devices have been provided (see the chapters “Protection of the pumping part” and “Protection of the transmission part”).

2 - Protection of the pumping part

The heating of the pumping part is directly related to the functioning temperature of the hose.

The lifespan of the hose, which is the heart of any peristaltic pump, is strongly dependent on the working temperature of the hose : it imposes the working limits of the Tapflo peristaltic pumps. Consequentially, the working temperature of the hose (and thus the heating of the pump) must be known and controlled, and it depends on the three following parameters :

> Temperature of pumped product
> Number of rotations of the pump
> Discharge pressure

For PUMPS II 2 G T4 : use of a PT100 temperature sensor only in a gas atmosphere

The permanent control of the maximum surface temperature of the pump housing makes it possible to control the heating of the pump effectively.

In the event of dysfunction of the pump (excessive rotation, too high temperature of pumped product, unsuitable shimming of the shoes…), the temperature sensor will detect any passing over the critical temperature of the body and will stop the pump before the surface temperatures of the pump exceed the limit corresponding to the classification of temperature T of the pump.

The threshold of release of the temperature sensor will have to be ajusted from 0°C to 75°C more or less 5°C, with a 10°C hysteresis.

For PUMPS II 3 G T4, II 2 D et II 3D : for dust zones, D becomes IP6X

According to the specific requirements for ATEX materials group II category 3, the use of such materials in an exposable atmosphere is adapted only under normal working conditions of the known material.

Thus, the end-user must make sure that the pump is used under normal working conditions, and that the particular working limits indicated in this manual are respected.

3 - Protection of the transmission part

The reducer and the motor which motorize the pump must be used within the limits of working defined by the manufacturers of these materials. Going beyond these limits is likely to generate a risk of ignition of the atmosphere surrounding the material.

The Tapflo pump installations are in particular designed so that the normal working conditions of the pump do not generate an overload of the motor or the reducer.

So that the function limits of these components are not exceeded, even in case of dysfunction of the pump, the motor will have to be protected from the overcurrents, in accordance with the code of practice.

4 - Particular dispositions when using a frequency inverter

The Tapflo peristaltic pumps have variable limits of working according to the discharge pressure, number of rotations of the pump and temperature of the pumped product. These working limits are mainly imposed by the heating of the hose, on which the lifespan is strongly dependent.

Within the framework of an application required to change the speed of the pump, the three following points will have to be checked.

> Temperature of pumped product
> Number of rotations of the pump
> Discharge press

The maximum values of use will be fixed at the determination of the pump whose copy is in the appendix.

5 - Dry running the pumps

The Tapflo peristaltic pumps can function in the absence of liquid in the pump, without causing heating of the pump higher than the classified of temperature T, in particular for the period of starting-up of the pump.

In fact, dry running the pump with blocked inlets or outlets generates too high a demand on the pump hose, and can generatehigh internal temperatures because of the compression and decompression of the air locked up between the pump and the blocked opening.

This type of dysfunction is not controllable by a safety device (of sensor type) because the pump is dry and the mechanical constraints generated on the pump are low. Starting up the pump must thus be done after having checked that the inlet and outlet are not blocked.

Nevertheless, dry running is not a normal function of the pump and if it doesn't directly constitute a risk of ignition, it leads to premature wear and tear of the hose. This type of function must be limited as much as possible.

6 - Remplacement of parts

The parts should be replaced only by original Tapflo parts which correspond to the configuration of origin of the pump. If necessary, the characteristics of the pump are modified and the ATEX certification of the pump is not applicable any more.

With each hose replacement, the adjustment of compression of the hose must be controlled and adapted to the instructions of adjustment registered in the handbook.

The technicians who intervene on ATEX material must be ATEX trained and approved.

7 - Solvents incompatible with the pump's seals

The user must make sure that the seals and the hose with which the pump is equipped are compatible with the pumped product and the products used in the cleaning of the pump.

8 - Possible leakages of pumped liquid

The possible leakages of liquid by the pump's seals do not generate a risk of ignition as long as the explosive atmosphere surrounding the material corresponds to the type of atmosphere for which it was planned.

You have to check that in contact with the atmosphere surrounding the pump or of a material located near the pump, the pumped liquids are not likely to create an explosive atmosphere for which the material was not envisaged.

The rupture of the hose, which is a wearing part, can involve important leakage of pumped liquid. A hose detector makes it possible to detect these leakages and will stop the pump if necessary.

9 - Drive of the pump

The maximum speed of rotation of the pumps must be respected (see certification of the pumps). At the start or after any modification of the pumping installation, the speed of rotation of the pump must be controlled and must be lower than the maximum speed indicated in the instructions.

9.1 - Electric installation of the motor or the motor reducer of the pump

Check the agreement between the indications of the motor gauge and the supply voltage.
For the connection of the motor to the electrical supply network, follow the indications of the manual supplied with the motor.

Follow the assembly diagram of wiring, make sure the wires are adapted to the power consumption and make sure the contacts are tight.

The motors must be protected by suitable circuit breakers and fuses. Make sure the earth connections are properly made.

Dry run the pump to make sure that the connections are correct and that the direction of rotation corresponds well with the suction and the discharge of the installation.

9.2 - Ground connection of the pump

A bonding strip lug can be seen on the frames and on the pump housing of PTL type pumps.

9.3 - ATEX characteristics of the motor or the motor reducer of the pump

The motor or motor reducer must have ATEX characteristics adapted to recognized use (group gas IIB, class of temperature T4) and must explosion-proof.

10 - ATEX characteristics of the pumping installation

A pumping installation can be composed of materials (motor, reducer, sensors…) from which ATEX characteristics are different from those of the pump.

In this case, the group will have ATEX characteristics corresponding to characteristics ATEX of the component with the lowest level of protection.

11 - Pumping vat of retention

At a constant arrival of liquid in a vat of retention in an ATEX zone, the uninterrupted start-up can generate a classification in zone 0.

The case can only arise when the pump is used in the starting position. It is then imperative that the suction pipe always has liquid present so as not to create explosive conditions in the presence of fuel and combustive agents. Thus, the adjustment of the low point of the tank will have to be higher than the opening of the suction pipe.

That will always result in the presence of liquid and not of gas and liquid.

12 - Marking of the pump

The marking of the Tapflo pump is of type :

Tapflo

TYPE PTL

Ex II 2 G T4 or Ex II 3 G T4

N° series

Year

The marking of the Tapflo groups is of type :

Tapflo

Gpe PTL

Ex II 2 G T4 or Ex II 3 G T4

N° series

Year

In the case of a pumping group, ATEX certified materials will retain their original markings.

11 / SECURITY FORM

In compliance with Health & Safety Regulations you, the user are required to declare the substances that have been in contact with the product(s) you are returning to Tapflo or any of its subsidiaries or distributors. Failure to do so will cause delays in servicing the item or in issuing a response. Therefore, please complete this form to ensure that we have the information before receipt of the item(s) being returned.

A FURTHER COPY MUST BE ATTACHED TO THE OUTSIDE OF THE PACKAGING CONTAINING THE ITEM(S).

You, the user, are responsible for cleaning and decontaminating the item(s) before returning them.

Please complete a separate decontamination certificate for each item returned.

• 1.0 /

COMPANY NAME

Address

City

Postal code

Country

Tel

Fax

• 2.0 / PUMP

2.1 / SERIAL NUMBER

2.2 / Has the pump been used ? YES NO

If yes, please complete all the following paragraphs. If no, please complete paragraph 5 only.

• 3.0 / DETAILS of substances pumped

3.1 / CHEMICAL Names

a) b) c)

3.2 / Precautions to be taken in handling these substances

a) b) c)

3.3 / Action to be taken in the event of human contact

a) b) c)

3.4/ Cleaning fluid to be used if residue of chemical is found during servicing.

• 4.0 /

"I hereby confirm that the only substances(s) that the equipment specified has pumped or come into contact with are those named, that the information given is correct, and the carrier has been informed if the consignment is of a hazardous nature."

• 5.0 /

Signed Name

Position Date

Remarks : to assist us in our servicing please describe any fault condition you have witnessed.

12 / STATEMENT OF COMPLIANCE CE

SECTION 1.0

Description of the pump :

Producd in France for:
Tapflo AB

Filaregatan 4S-44234 Kungälv, Sweden

TEL : +46 303 633 90

Type :
PTL09, PTL13, PTL17, PTL25, PTL30 and PTL45

Serial N° :
Description : Volumetric pump, hose pump.

SECTION 2.0

Applicable directives :

Machinery directives :

89 / 392 / EEC
89 / 655 / EEC
91 / 368 / EEC
93 / 44 / EEC

SECTION 3.0

Label :

SECTION 4.0

Statement :

We declare under our responsibility that the equipment defined in section 1.0 satisfies in all the directives of the European Community specified in section 2.0 and in the French work legislation.

Håkan Ekstrand

Date: 30 July 2007

TAPFLO AB

Sweden

Filaregatan 4 | S-442 34 Kungälv
Tel: +46 303 63390
Fax: +46 303 19916

E-mail addresses:
Commercial questions: sales@tapflo.com
Orders: order@tapflo.com
Tech support: support@tapflo.com

Tapflo products and services are available in 68 countries on 6 continents.

Tapflo is represented worldwide by own Tapflo Group Companies and carefully selected distributors assuring highest Tapflo service quality for our customers' convenience.

AUSTRALIA | AUSTRIA | AZERBAIJAN | BELARUS | BELGIUM | BOSNIA & HERZEGOVINA | BRAZIL | BULGARIA | CANADA | CHILE | CHINA | COLOMBIA | CROATIA | CZECH REPUBLIC | DENMARK | ECUADOR | ESTONIA | FINLAND | FRANCE | GREECE | GEORGIA | GERMANY | HONG-KONG | HUNGARY | ICELAND | INDIA | INDONESIA | IRELAND | ISRAEL | ITALY | JAPAN | JORDAN | KAZAKHSTAN | LATVIA | LITHUANIA | MACEDONIA | MALAYSIA | MEXICO | MONTENEGRO | MOROCCO | THE NETHERLANDS | NEW ZEALAND | NORWAY | POLAND | PORTUGAL | PHILIPPINES | ROMANIA | RUSSIA | SERBIA |SINGAPORE | SLOVAKIA | SLOVENIA | SOUTH AFRICA | SOUTH KOREA | SPAIN | SWEDEN | SWITZERLAND | TAIWAN | THAILAND |TURKEY | UKRAINE | UNITED ARAB EMIRATES | UNITED KINGDOM | USA | UZBEKISTAN | VIETNAM

Tapflo Group Companies

Austria
Tapflo Austria
Tel: +43 732 27292910
sales@tapflo.at

Azerbaijan
Tapflo Azerbaijan LLC
Tel: +994 502660799
sales@tapflo.az

Baltic States
Tapflo Latvia
Tel: +371 67472205
sales@tapflo.lv

Belarus
Tapflo Belarus
Tel: +375 17 3934609
sales@tapflo.by

Bulgaria
Tapflo EOOD
Tel: +359 (2) 974 18 54
office@tapflo.org

Canada
Tapflo Canada
Tel: +1 514 813 5754
canada@tapflo.com

Croatia
Tapflo GmbH
Tel: +385 91 4884 666
sales@tapflo.hr

Czech Republic
Tapflo s.r.o.
Tel: +420 513033924
tapflo@tapflo.cz

China
Tapflo (Wuxi)
Tel: +86 510 8241 7602
sales@tapflo.cn

Denmark
Tapflo Danmark
Tel: +45 36 454600
info@tapflo.dk

France
Tapflo France
Tel: +33 1 34 78 82 40
info@tapflo.fr

Georgia
Tapflo Georgia
Tel: +995 577 463010
sales@tapflo.ge

India
Tapflo Fluid Handling India Pvt Ltd
Tel: +91 20 65000215
ad@tapflo.in

Ireland
Tapflo Ireland Ltd
Tel: +353 1 2011911
info@tapflo.ie

Italy
Tapflo Italia
Tel: +39 0362307698
info@tapfloitalia.com

Japan
Tapflo Japan K.K.
Tel: +81-3-6240-3510
tapflojp@tapflo.co.jp

Kazakhstan
Tapflo Kazakstan
Tel: +7 727 3278347
sales@tapflo.kz

Poland
Tapflo Sp. z o.o.
Tel: +48 58 530 42 00
info@tapflo.pl

Romania
S.C. Tapflo Rom. S.r.l.
Tel: +40 21 3451255
sales@tapflo.ro

Russia
Tapflo Company
Tel: +7 495 232 18 28
sales@tapflo.com.ru

Serbia
Tapflo d.o.o.
Tel: +381 21 44 58 08
sales@tapflo.rs

Slovakia
Tapflo s.r.o.
Tel: +421 911 137 883
tapflo@tapflo.sk

Slovenia
Tapflo GmbH
Tel: +386 68 613 474
ales@tapflo.hr

Spain
Tapflo Iberica
Tel: +34 91 8093182
avives@tapfloiberica.es

South Africa
Tapflo (Pty) Ltd
Tel: +27 31 701 5255
sales@tapflo.co.za

Turkey
Tapflo Makina Ltd
Tel: +90 216 467 33 11
sales@tapflo.com.tr

Ukraine
TOB Tapflo
Tel: +380 44 222 68 44
sales@tapflo.com.ua

Uzbekistan
Tapflo Uzbekistan
Tel.: +998 712340940
sales@tapflo.uz

United Kingdom
Tapflo (UK) Ltd
Tel: +44 2380 252325
sales@tapflopumps.co.uk